USB-DIO-32 - Buffered Digital I/O, Three Counter/Timers

FEATURES

- **High-speed USB 2.0 device, USB 1.1 compatible**
- **Small, portable 32-channel digital I/O module**
- **Four 8-bit ports independently selectable for inputs or outputs**
- **All 32 I/O lines buffered with Sink 64mA / Source 32mA current capabilities**
- **Removable screw terminal adaptor for easy wiring**
- **Standard 50-pin IDC connector with key**
- **Custom high-speed function driver**
- **PC/104 module size and mounting compatibility**
- **Small (4" x 4" x 1.25") rugged industrial enclosure**

FACTORY OPTIONS

- **Three 82C54 counter/timers**
- **External power for high current capabilities**
- **DIN rail mounting provision**
- **Economy "E" version also available without the screw terminal board**
- **OEM (board only) version with PC/104 mounting holes and PCB footprint for added flexibility in embedded applications**

FUNCTIONAL DESCRIPTION

The USB-DIO-32 is an ideal solution for adding portable, easy-to-install digital I/O and counter capabilities to any computer with a USB port. The USB-DIO-32 is a USB 2.0 high-speed device, offering the highest speed available with the USB bus. It is fully compatible with both USB 1.1 and USB 2.0 ports. The unit is plug-and-play allowing quick connect or disconnect whenever you need additional I/O on your USB port.

The USB-DIO-32 features 32 bits of TTL-compatible digital I/O with high-current capabilities and three optional 82C54 counters. Each digital port can be programmed to accept inputs or to drive outputs on four 8-bit ports, designated as port A, B, C, and D. Power is supplied to the board via the USB cable or for higher current capabilities, external power may be used. The I/O wiring connections for USB-DIO-32 are via an industry standard 50-pin connector. For external circuits, fused +5VDC power is available at the connector. This resettable fuse is rated at 0.5A.

All I/O lines are buffered by a type 74ABT245 tri-state buffer transceiver capable of sinking 64 mA or sourcing 32 mA. The buffers are configured under program control for input or output. Jumper selectable pull-ups (to +5 VDC) or pull-downs (to ground) on the board allow for contact monitoring and assure that there are no erroneous outputs at power-up until the board is initialized by system software.

The USB-DIO-32 is designed to be used in rugged industrial environments but is small enough to fit nicely onto any desk or testing station. The board is PC/104 sized (3.550 by 3.775 inches) and ships inside a steel powder-coated enclosure with an anti-skid bottom.

COUNTER/TIMERS

Three 82C54 chips each include three 16-bit counter/timers factory configured in an optimal module for use as event counters, frequency output, pulse width, and frequency measurement (see the Block Diagram).

OEM USB/104 FORM FACTOR

The OEM (board only) version is perfect for a variety of embedded applications. What makes the OEM option unique is that its PCB size and mounting holes match the PC/104 form factor (without the bus connections). This allows our rugged digital board to be added to any PCI-104 or PC/104 stack by connecting it to a simple USB port usually included on-board with embedded CPU form factors such as EBX, EPIC, and PC/104. This is especially important since many newer CPU chipsets do not support ISA and have plenty of USB ports. The USB-DIO-32 OEM board can also be installed using standoffs inside other enclosures or systems.

ACCESSORIES

The USB-DIO-32 is available with optional cable assemblies and screw terminal board. The pin connections are also compatible with industry standard I/O racks such as ACCES A24A, OPTO22, Gordos, Potter & Brumfield, etc. with optional cable.

SOFTWARE

The USB-DIO-32 is plug-and-play which allows quick connect or disconnect whenever you need additional I/O on your USB port. The module utilizes a high-speed custom function driver optimized for a maximum data throughput that is 50-100 times faster than the USB human interface device (HID) driver used by many competing products. This approach maximizes the full functionality of the hardware along with capitalizing the advantage of high-speed USB 2.0. The USB-DIO-32 is supported for use in most USB supported operating systems and includes a free Linux and Windows 98se/Me/2000/XP/2003 compatible software package. This package contains sample programs and source code in Visual Basic, Delphi, C++ Builder, and Visual C++ for Windows. Also incorporated is a graphical setup program in Windows. Third party support includes a Windows standard DLL interface usable from the most popular application programs. Embedded OS support include Windows XPe.

ADL Embedded Solutions Inc., 4411 Morena Blvd., Suite 101, San Diego, CA 92117-4345
P. +1 858 490-0597 **F.** +1 858 490-0599
e-mail: sales@adl-usa.com; **web**: www.adl-usa.com

BLOCK DIAGRAM

.

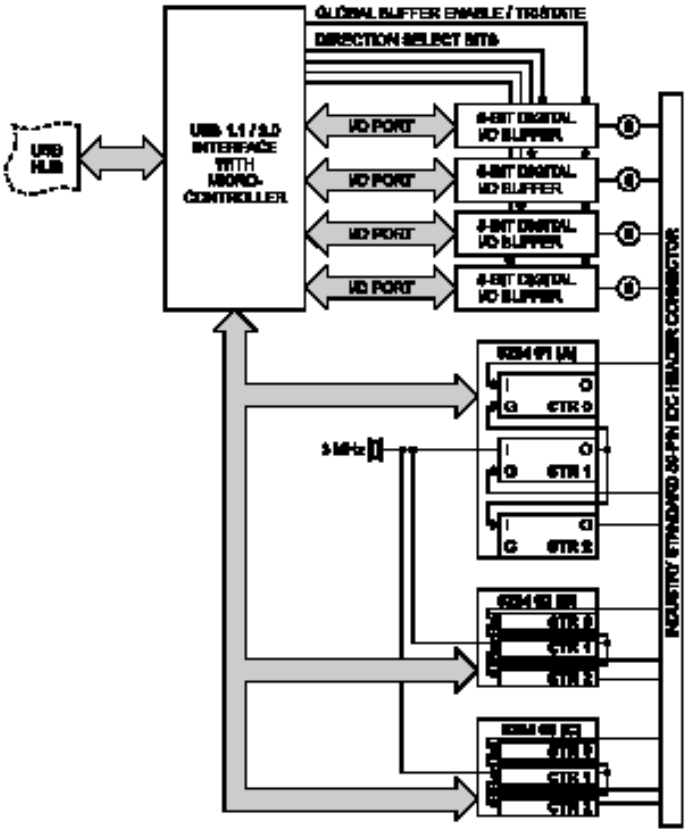

CONNECTOR PIN ASSIGNMENTS

USB-DIO-32 has a 50-pin connector provided for I/O connections

PIN	FUNCTION	PIN	FUNCTION
1	DIO C7	2	A0 IN
3	DIO C6	4	A1 GATE
5	DIO C5	6	A2 OUT
7	DIO C4	8	B0 IN
9	DIO C3	10	B1 GATE
11	DIO C2	12	B2 OUT
13	DIO C1	14	C0 IN
15	DIO C0	16	C1 GATE
17	DIO B7	18	C2 OUT
19	DIO B6	20	DIO D7
21	DIO B5	22	DIO D6
23	DIO B4	24	GND
25	DIO B3	26	DIO D5
27	DIO B2	28	GND
29	DIO B1	30	DIO D4
31	DIO B0	32	GND
33	DIO A7	34	DIO D3
35	DIO A6	36	GND
37	DIO A5	38	DIO D2
39	DIO A4	40	GND
41	DIO A3	42	DIO D1
43	DIO A2	44	GND
45	DIO A1	46	DIO D0
47	DIO A0	48	GND
49	+5V	50	GND

Table 1: Block Diagram and 50-Pin Connector Pin Assignments

Specifications

Digital Inputs (TTL Compatible)

Logic High:	2.0 to 5.0 VDC
Logic Low:	-0.5 to +0.8 VDC

Digital Outputs

Logic High:	2.0 VDC minimum source 32 mA
Logic Low:	0.55 VDC maximum sink 64 mA

Optional Counter/Timers

Type:	82C54-10 programmable interval counters
Output Drive:	2.0 VDC minimum source 32 mA
	0.55 VDC maximum
Input Gate:	TTL/CMOS compatible
Clock:	On-board
Active Count Edge:	Negative Edge
Minimum Clock Pulse Width:	30 nS high 40 nS low
Timer Range:	16 bits
Maximum Input Frequency:	10MHz

Bus Type

USB 2.0 High-speed	USB 1.1 Full-speed compatible

Environmental

Operating Temperature Range:	0° to 70°C (extended temp available)
Storage Temperature Range:	-40° to +85°C
Humidity:	5% - 95%, non-condensing
Board Dimension:	3.550 x 3.775 inches
Box Dimension:	4.00 x 4.00 x 1.25 inches

Power

+5VDC provided via USB bus up to 500mA**

Basic Unit with Three Counters: 100mA typical (no load)

+5VDC resettable fuse at 0.5A located on connector

** Optional on-board external power circuitry and AC/DC adapter can be ordered ("-P" option) if current use is expected to be greater than what can be supplied by the USB bus. Please check to see how much current your USB port can supply and how much current you anticipate using.

Ordering Guide

USB-DIO-32	Enclosure, module and screw terminal board

Options

-OEM	Board only version (no enclosure and screw terminal board)
-E	Economy model (no screw terminal board)
-DIN	DIN rail mounting provision
-P	External power and AC/DC adapter
-Cx	Number of counters (where x = 1, 2 or 3 counters)

Accessories

UTBK-50	External plug-in screw terminal board

ADL Embedded Solutions Inc., 4411 Morena Blvd., Suite 101, San Diego, CA 92117-4345
P. +1 858 490-0597 **F.** +1 858 490-0599
e-mail: sales@adl-usa.com; **web**: www.adl-usa.com